Hayetsira St. 17, Yokneam, Israel
**Tel:** +972-48-290-100
**Fax:** +972-48-325-251
**www.compulab.co.il**

4/3/2018

# Fitlet2 power button assembly

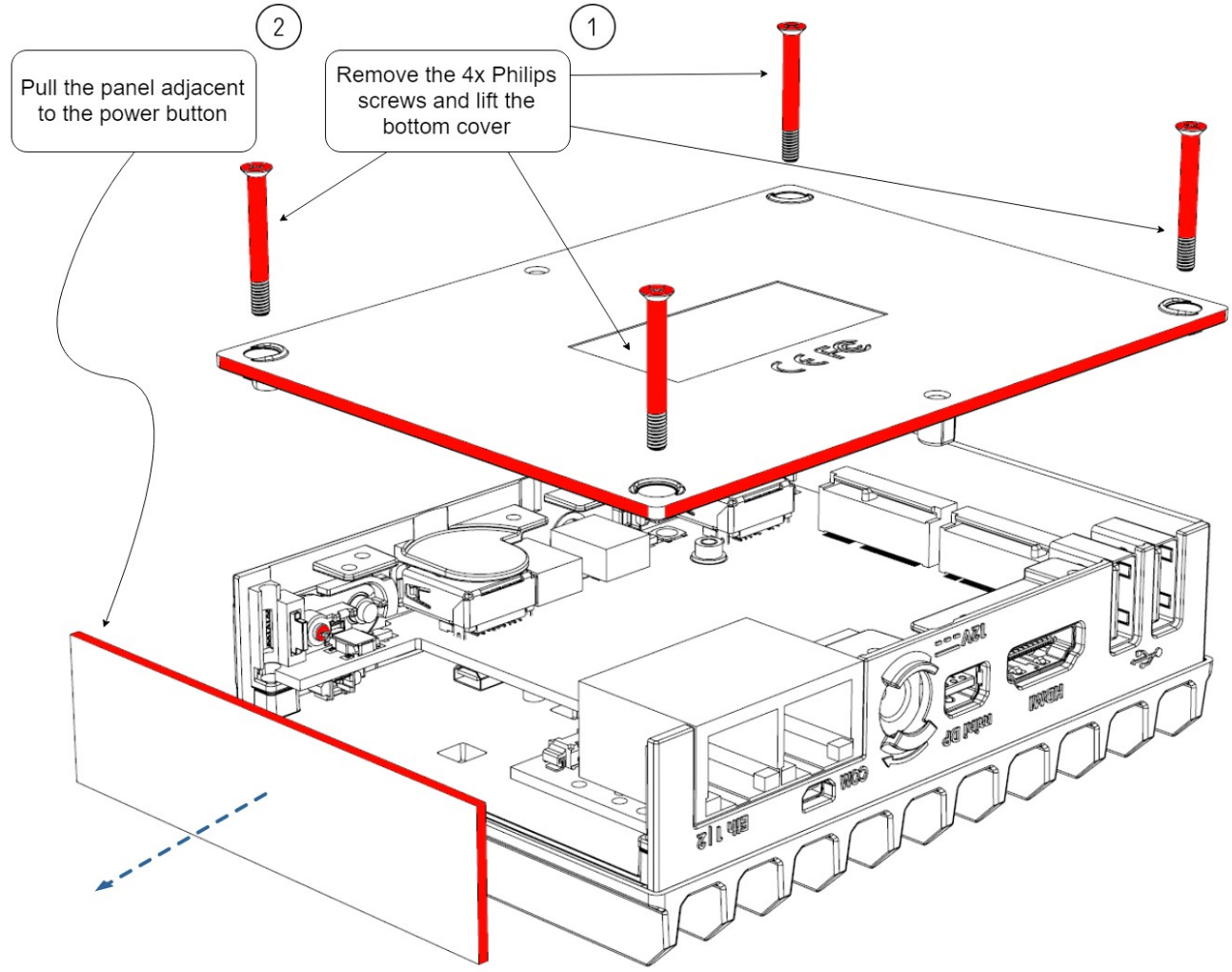


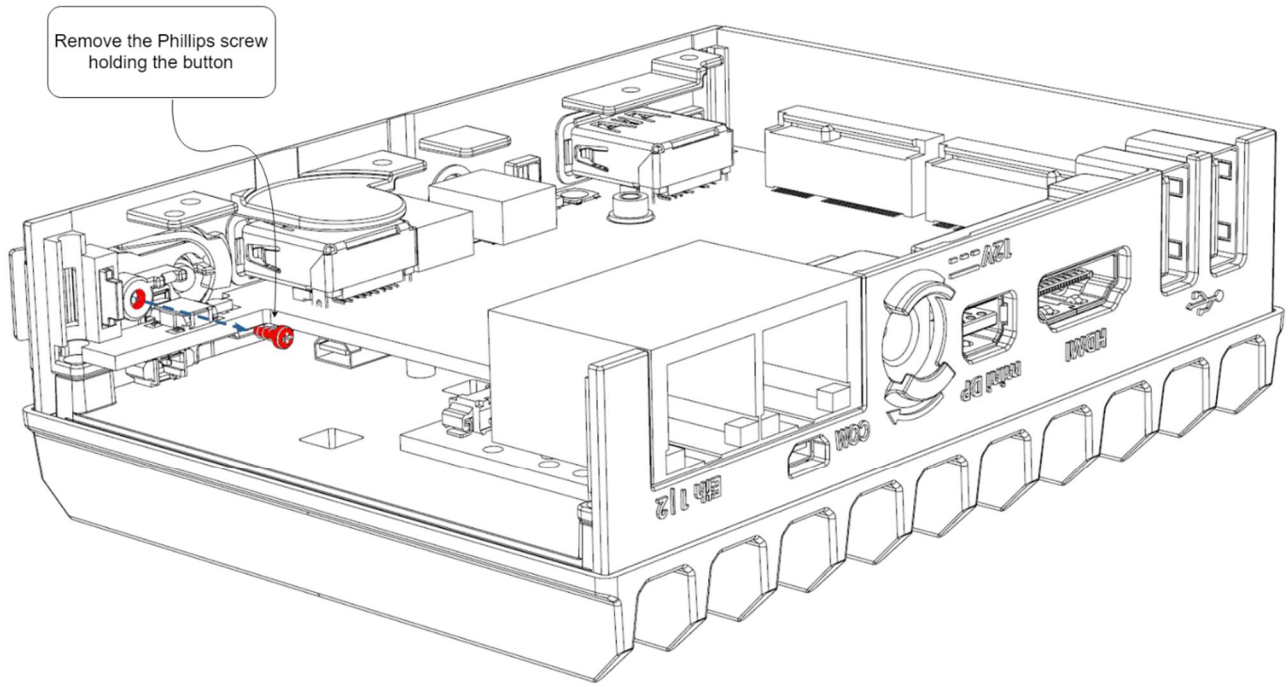

Hayetsira St. 17, Yokneam, Israel
**Tel:** +972-48-290-100
**Fax:** +972-48-325-251
**www.compulab.co.il**

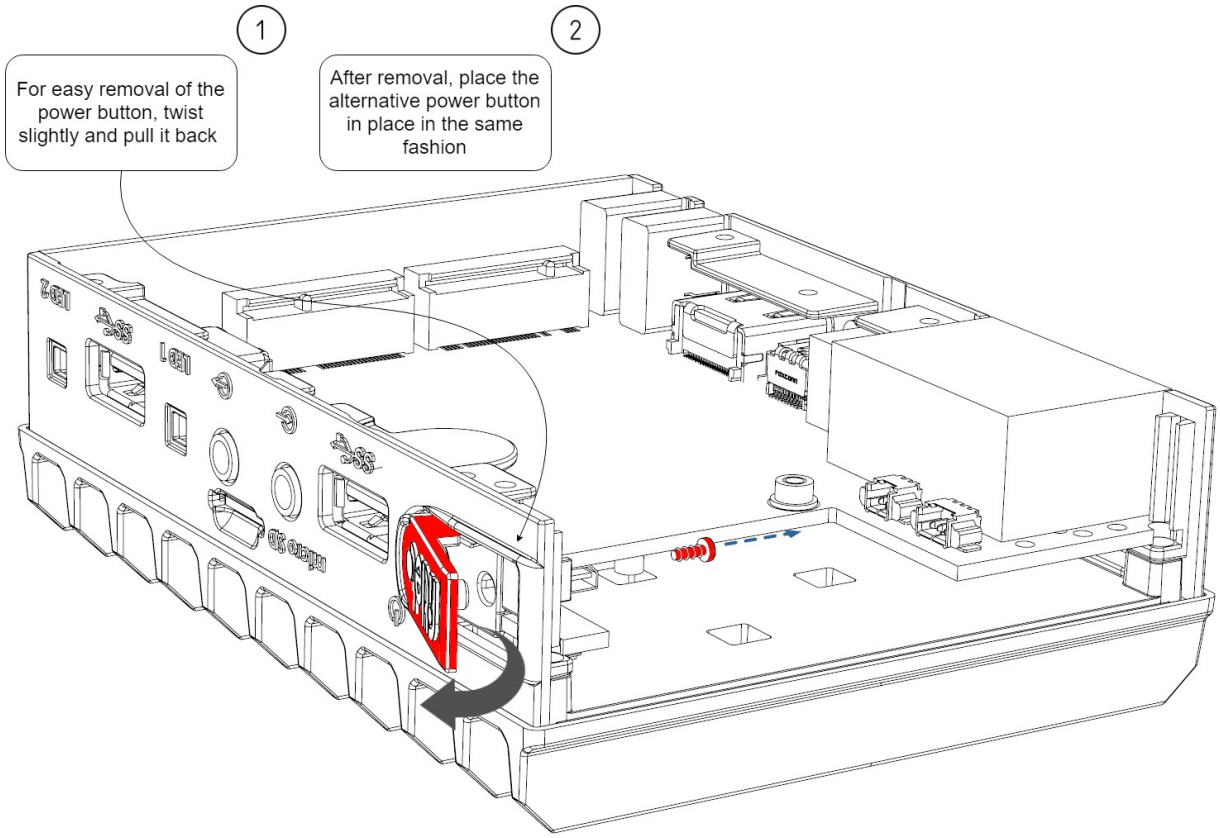


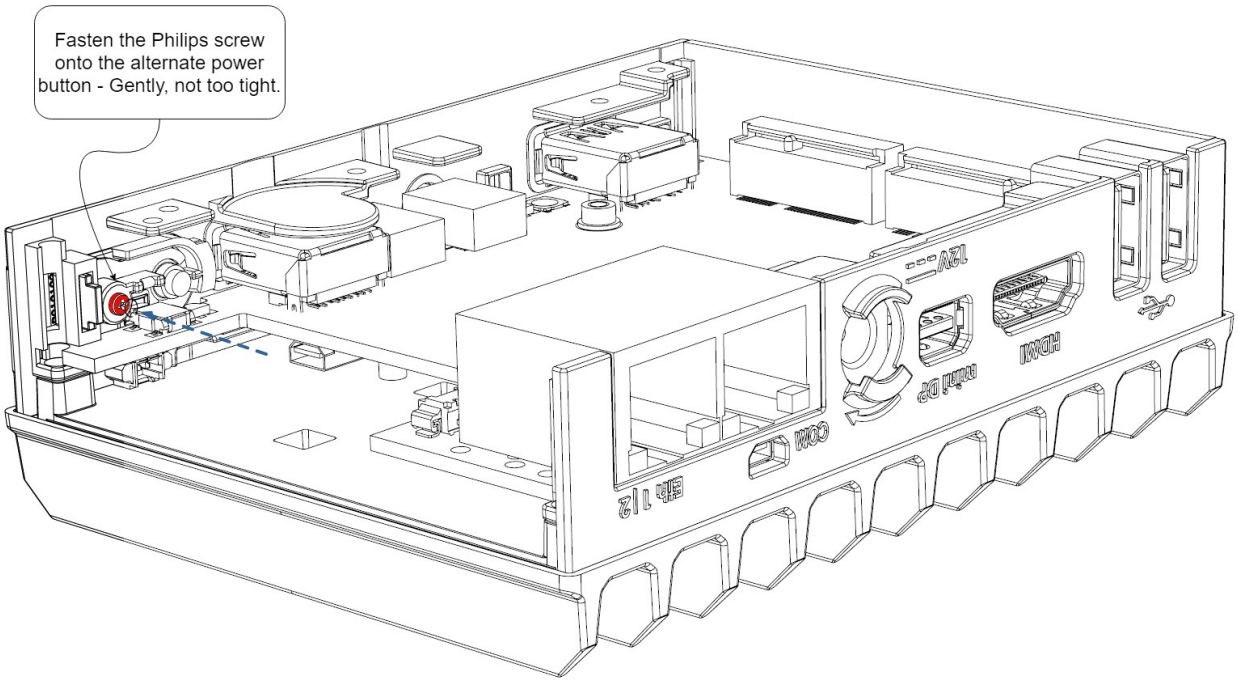

Hayetsira St. 17, Yokneam, Israel
**Tel:** +972-48-290-100
**Fax:** +972-48-325-251
**www.compulab.co.il**

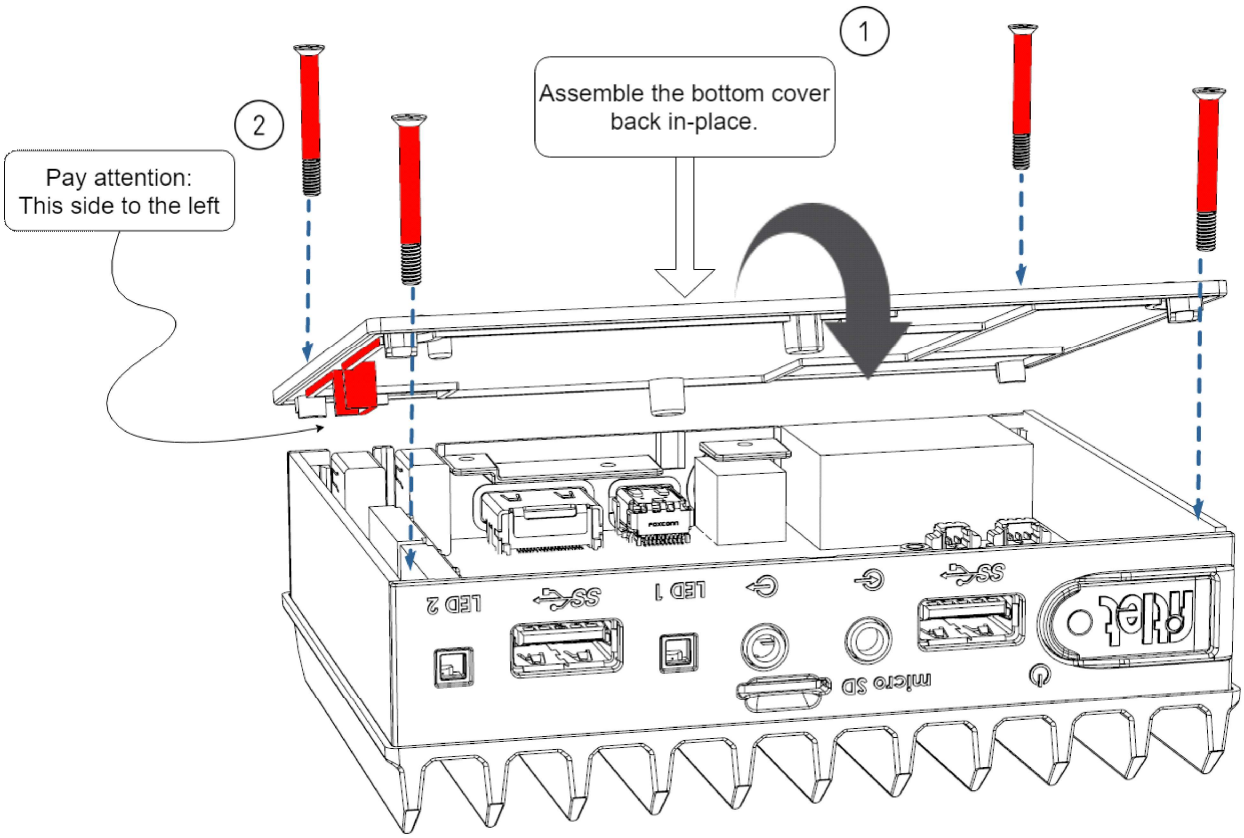


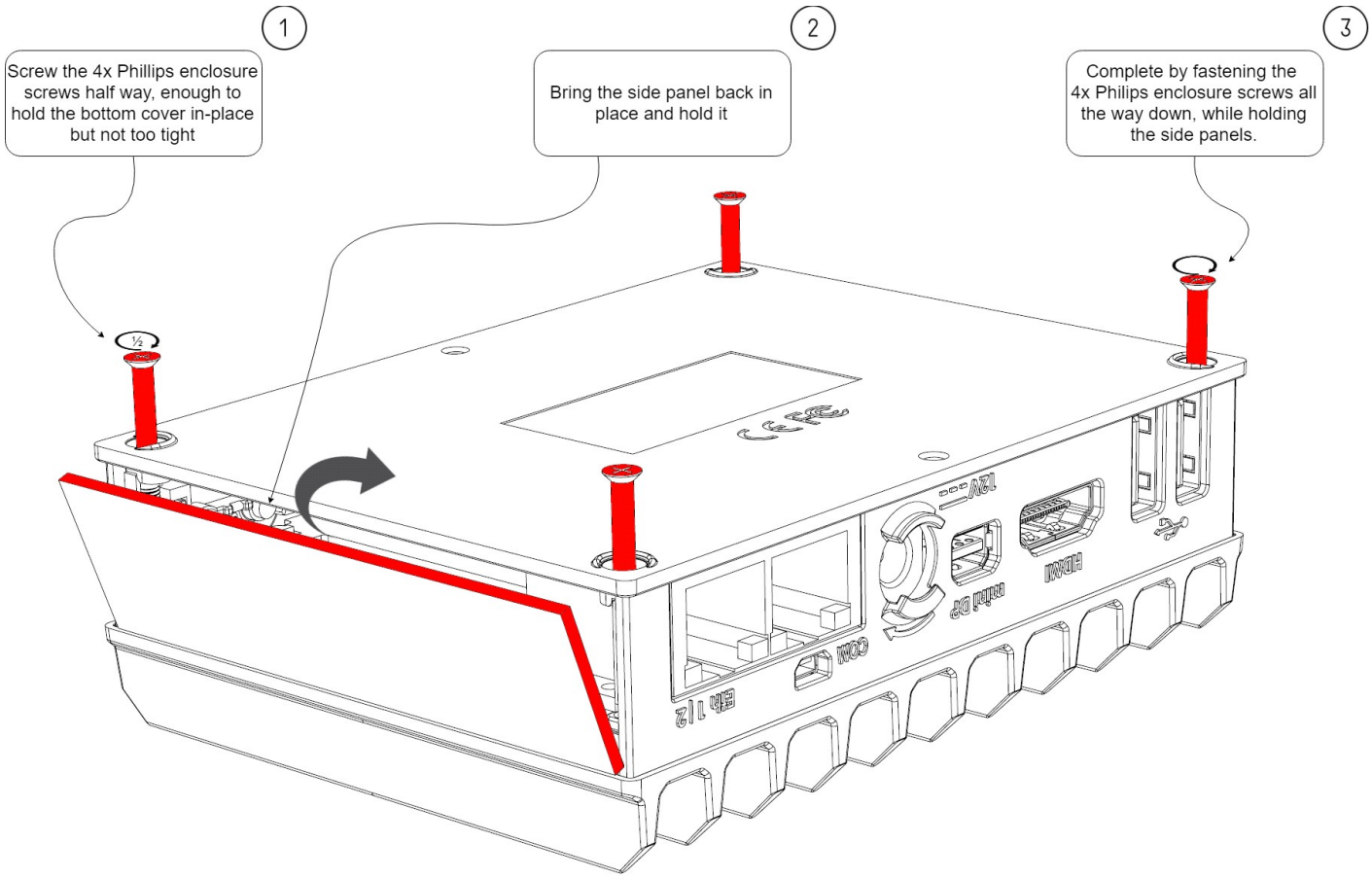
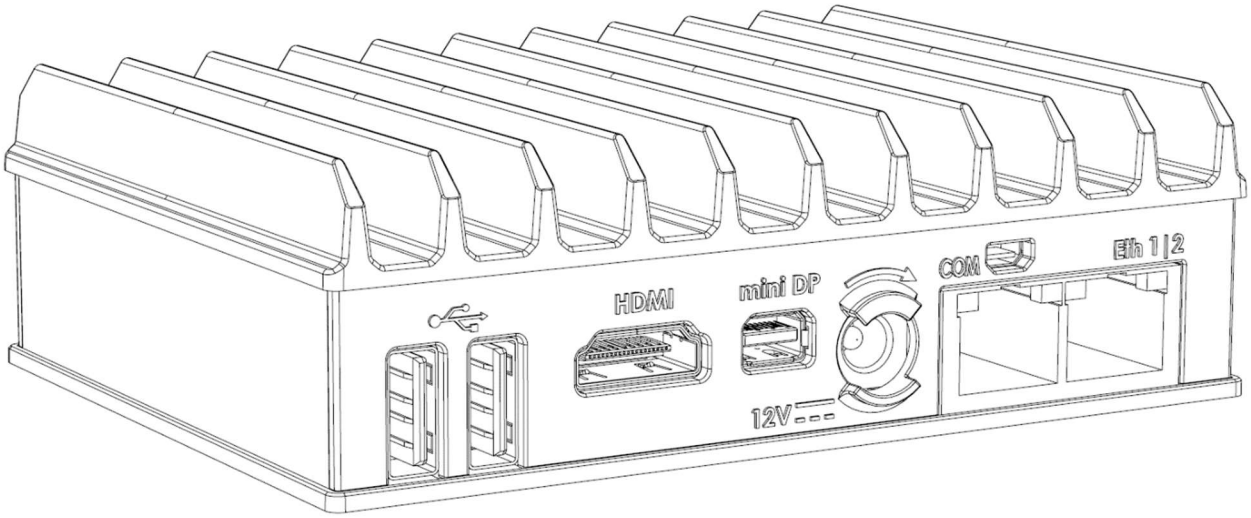
Hayetsira St. 17, Yokneam, Israel
**Tel:** +972-48-290-100
**Fax:** +972-48-325-251
**www.compulab.co.il**