fitlet2 FC-SCG Installation instructions

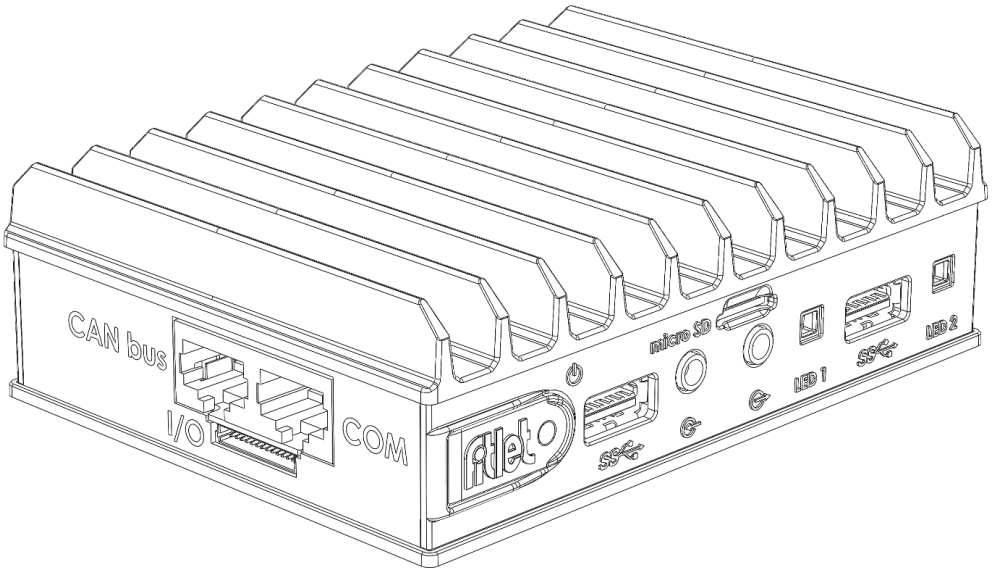

Package content

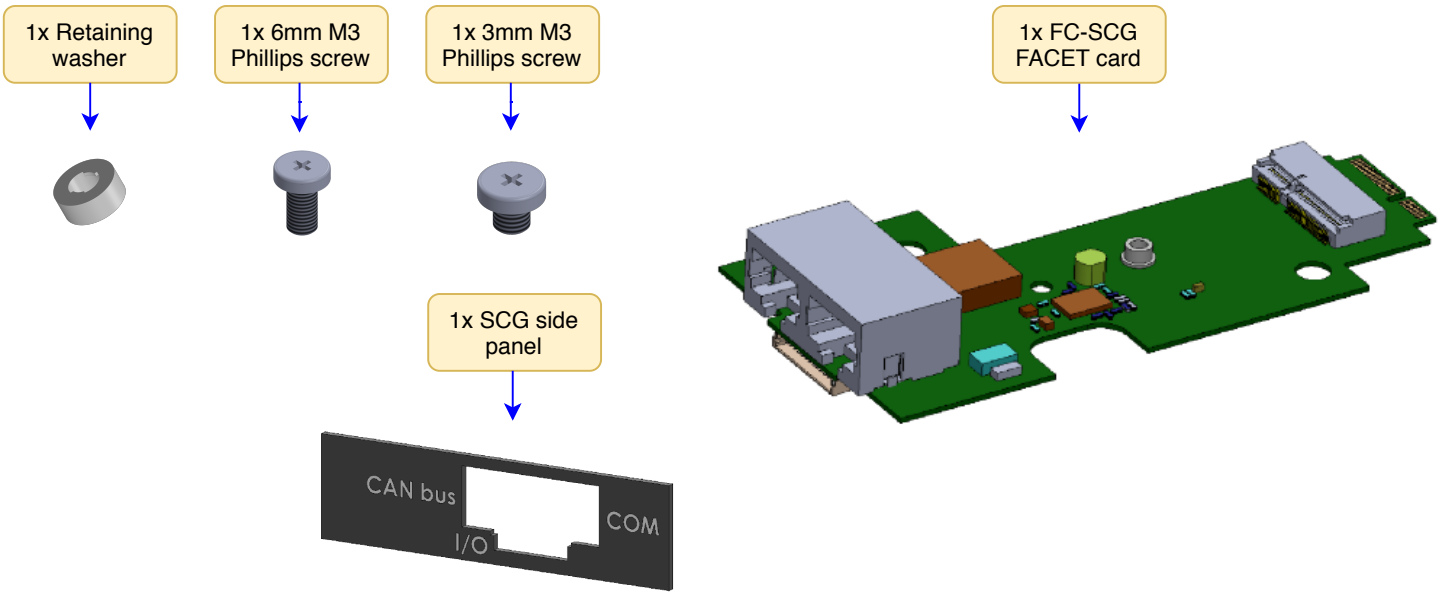

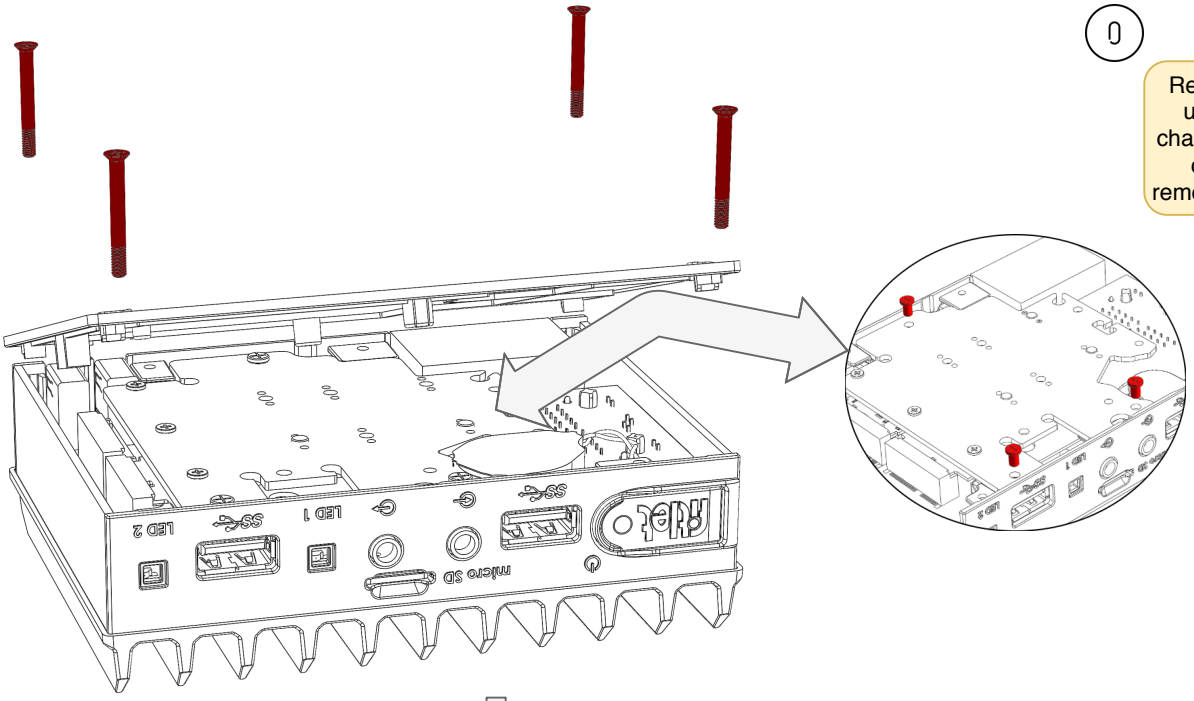

0

Remove the bottom cover by unscrewing the 4x Phillips chassis screws and pull out the cooling plate gently after removing the 3x Phillips screws.

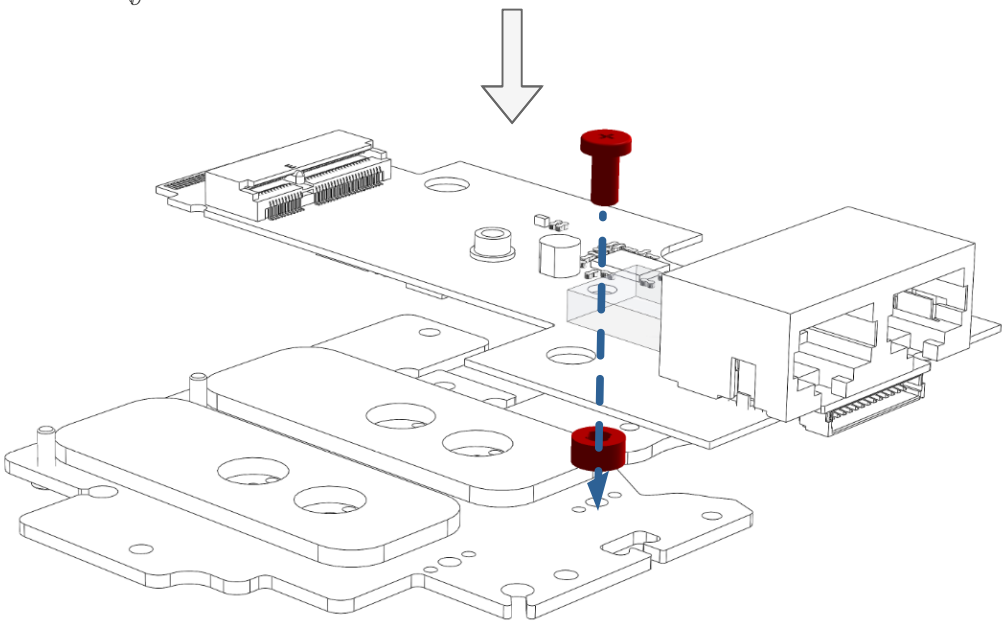

1

Remove the WiFi module from the cooling plate and then place the retaining washer at the designated location on the cooling plate and seat the FC-SCG on-top of it. Fasten the 6mm M3 Phillips screw.

If there's a Phillips screw at the edge of the cooling plate interfering with the FC-SCG's seating, remove it.

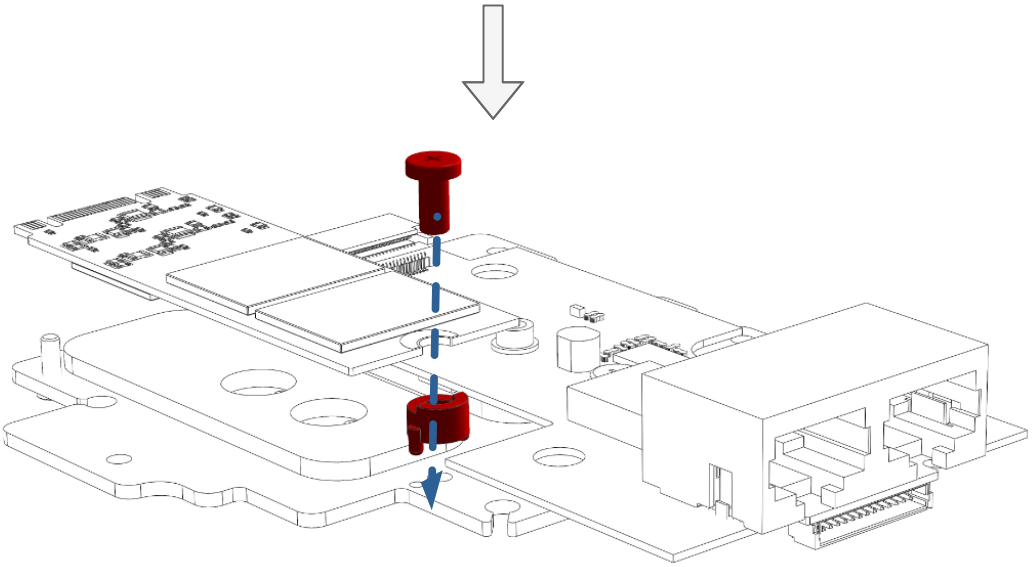

2

Place the red module spacer in the designated location and place the M.2 SSD (chips facing the thermal pad), then fasten using the 1x Phillips screw

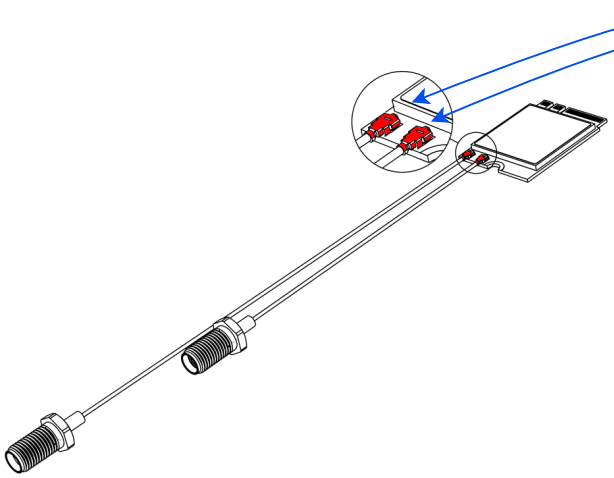

3

Plug the IPX connectors to the Wifi module as follows:
Long cable to port #1
Short cable to port #2

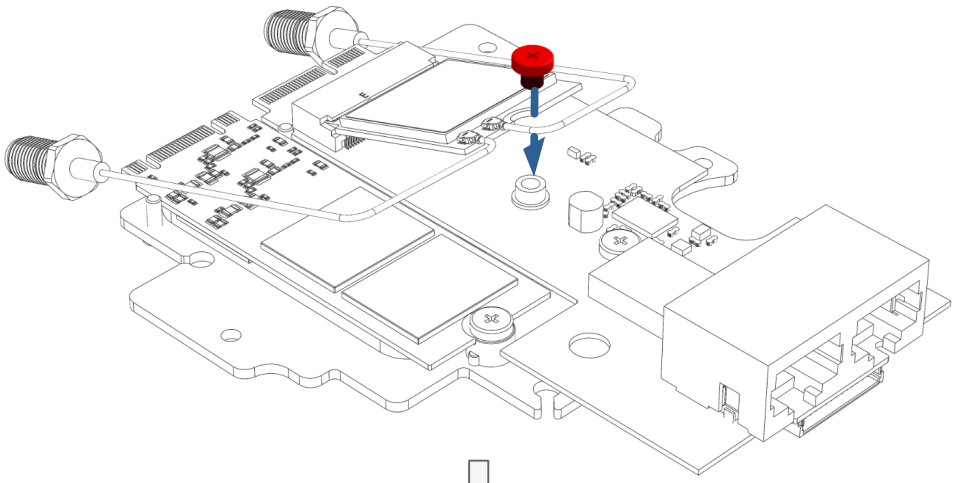

4

Fasten the WiFi module to the FACET with the Phillips screw

Note:
Use the 3mm M3 Phillips screw

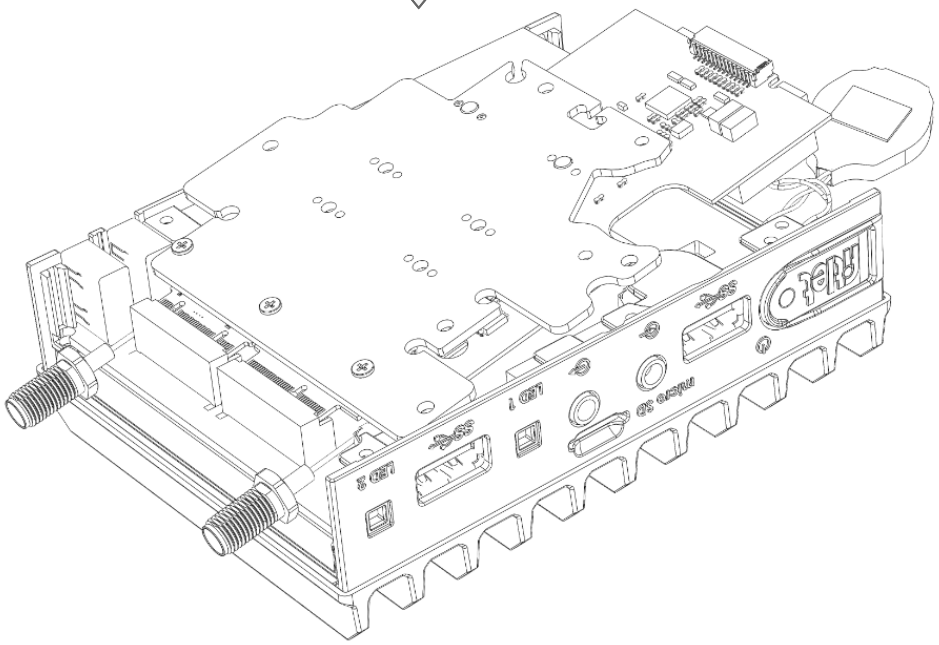

5

Seat the FACET into the M.2 sockets and route the SMA antenna cables outside of the enclosure

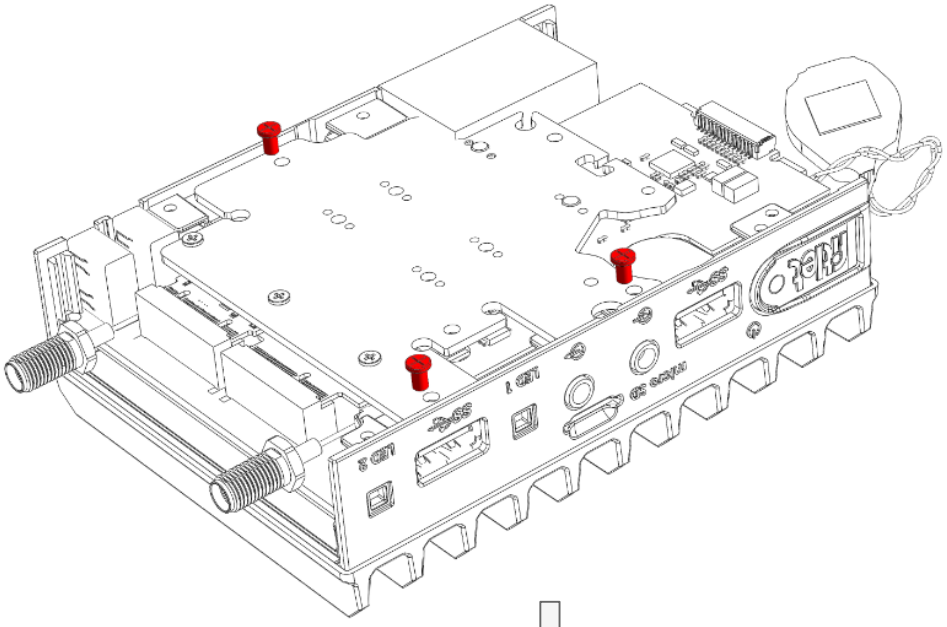

6

Fasten the cooling plate in place using the 3x Phillips screws.

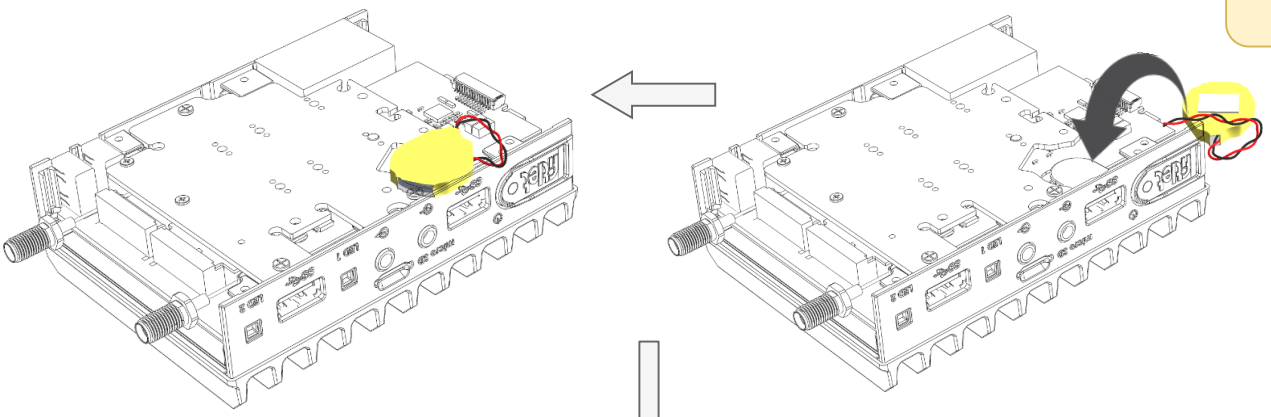

7

Stick the RTC battery in its place

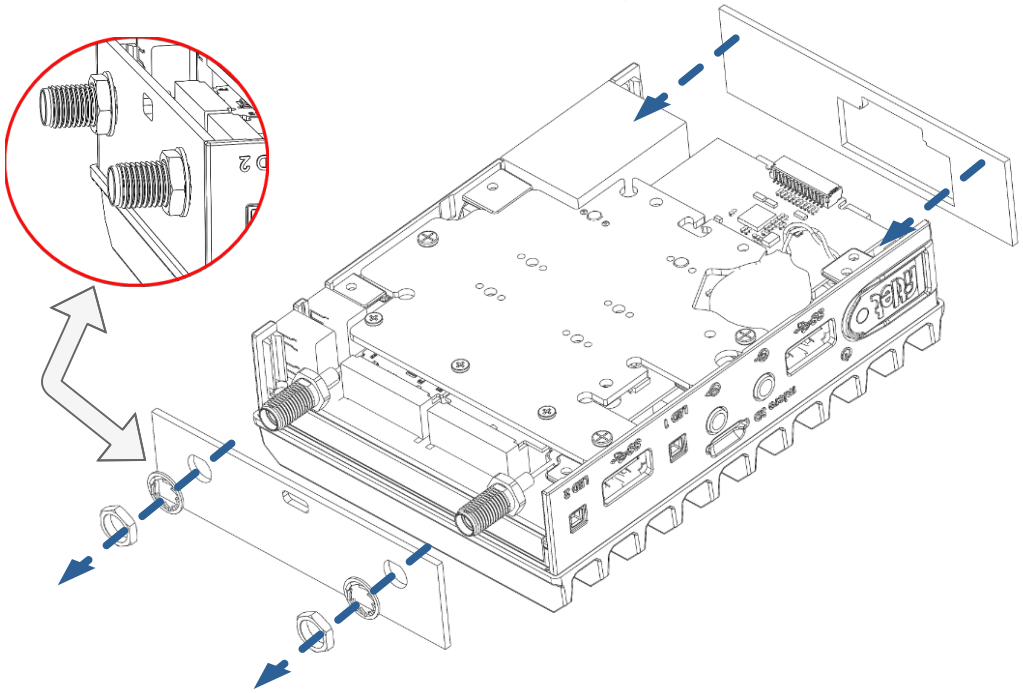

8

Assemble both side panels.

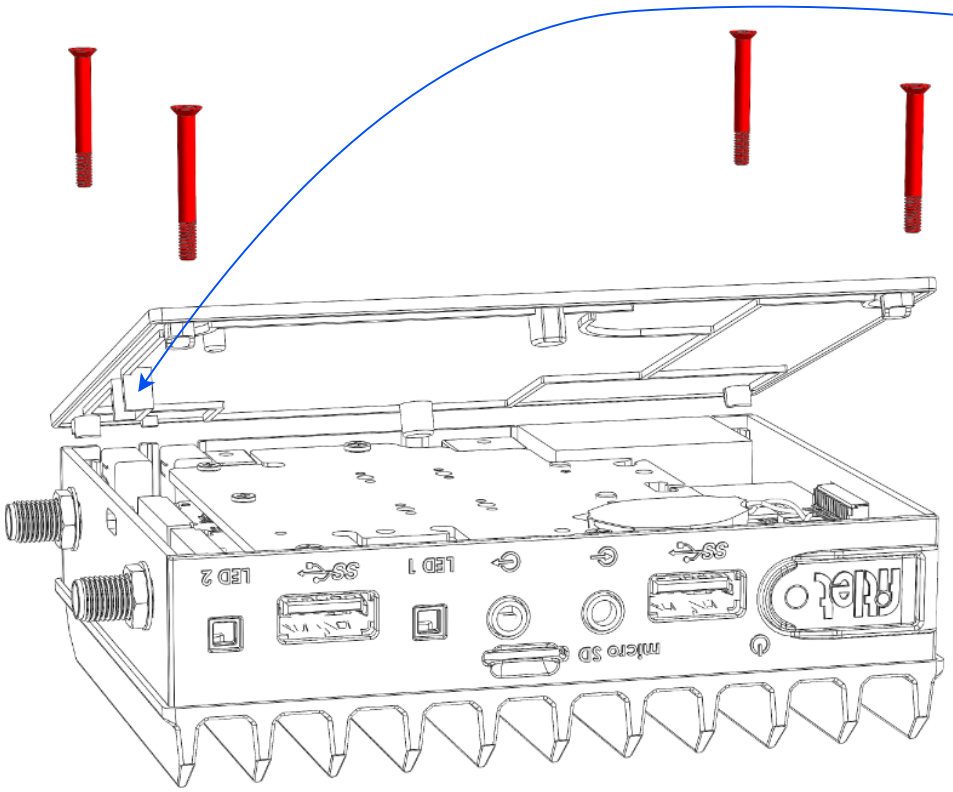

Note
Before placing the bottom cover, make sure the U-shaped Boss is at the side of the M.2 connectors

9

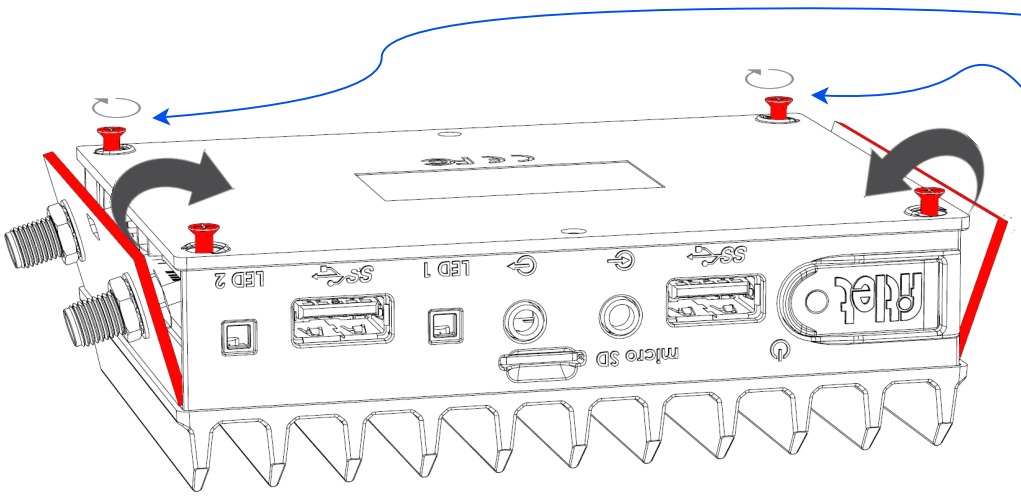

Screw the 4x Phillips enclosure screw half way, enough to hold the bottom cover in-place but not too tight

↓

Bring both side panels in place, and hold them

↓

Complete by tightening the Phillips enclosure screws all the way down, while holding the side panels