FT-DPHDMI 1.0

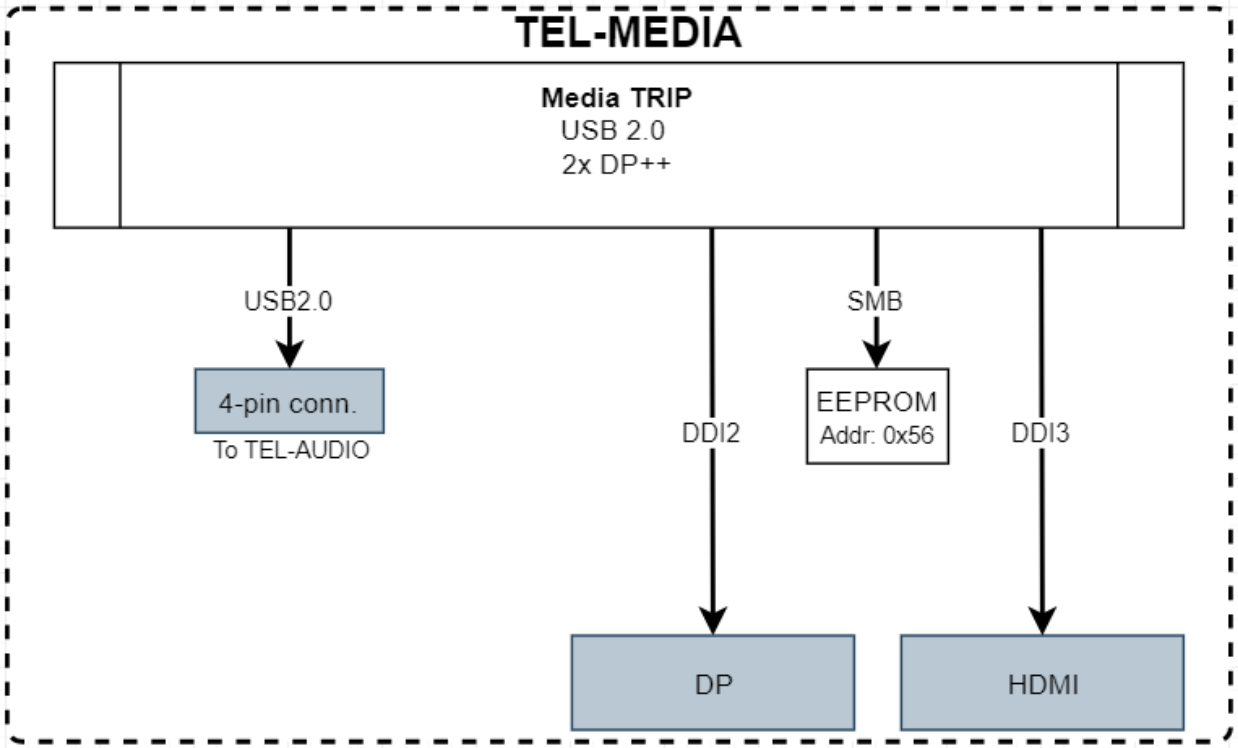

ZZ1

P/N = 188Z10030

PARSER_VERSION_1.0

PCB1

PCB, FT.A-DPHDMI, Rev 1.0

Title	01-INDEX	
Size A	Document Number <Doc>	Rev 1.0
Date: Tuesday, September 24, 2019	Sheet 1 of 3	

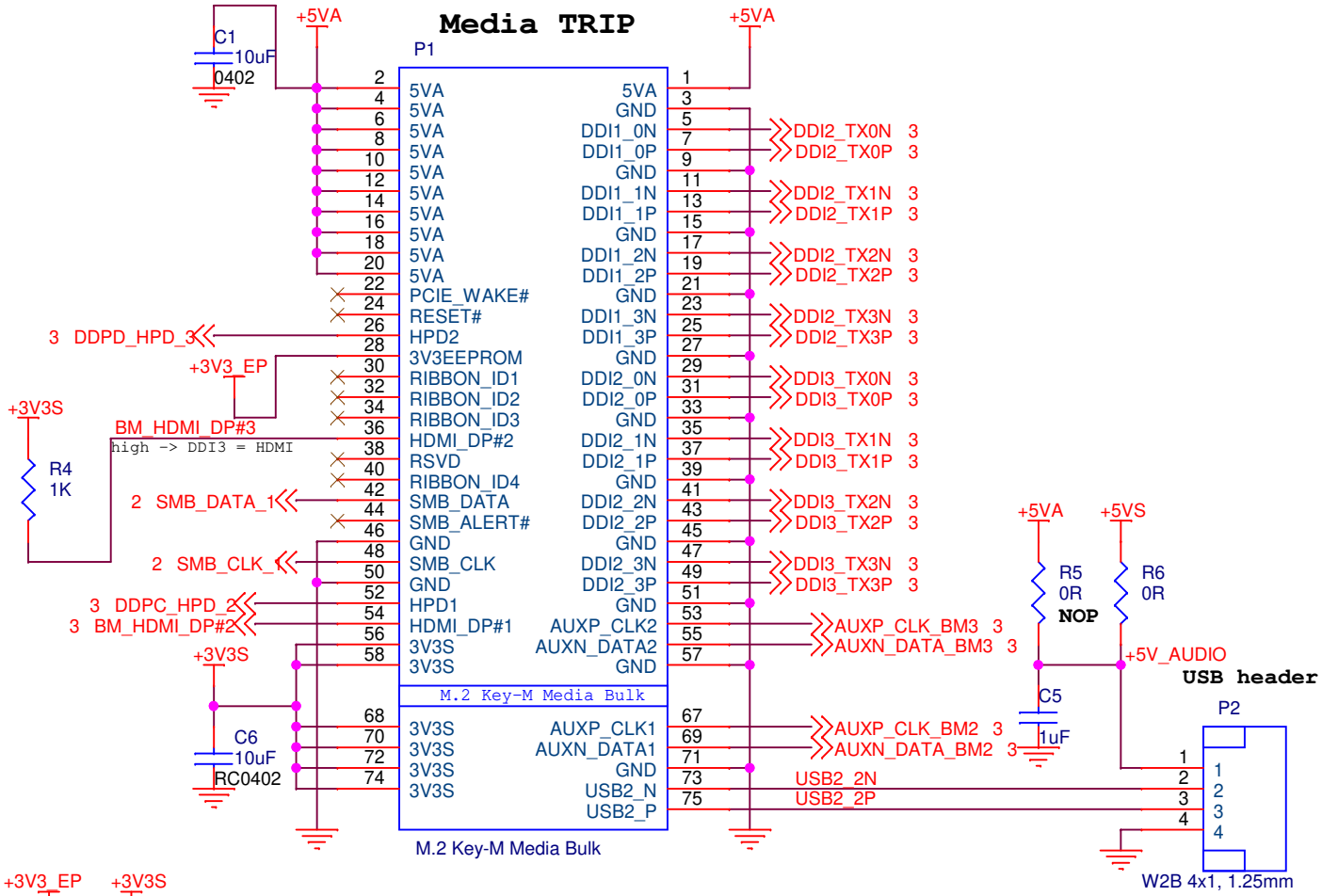

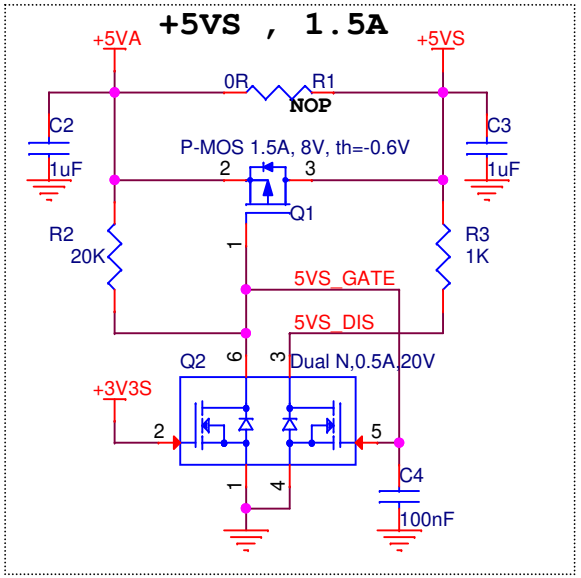

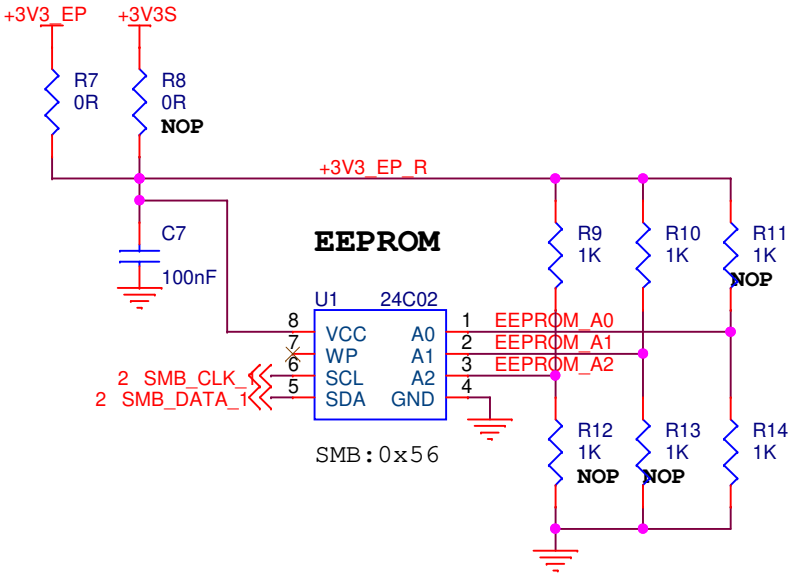

Title	02-TRIP	
Size A	Document Number <Doc>	Rev 1.0
Date: Tuesday, September 24, 2019	Sheet 2 of 3	

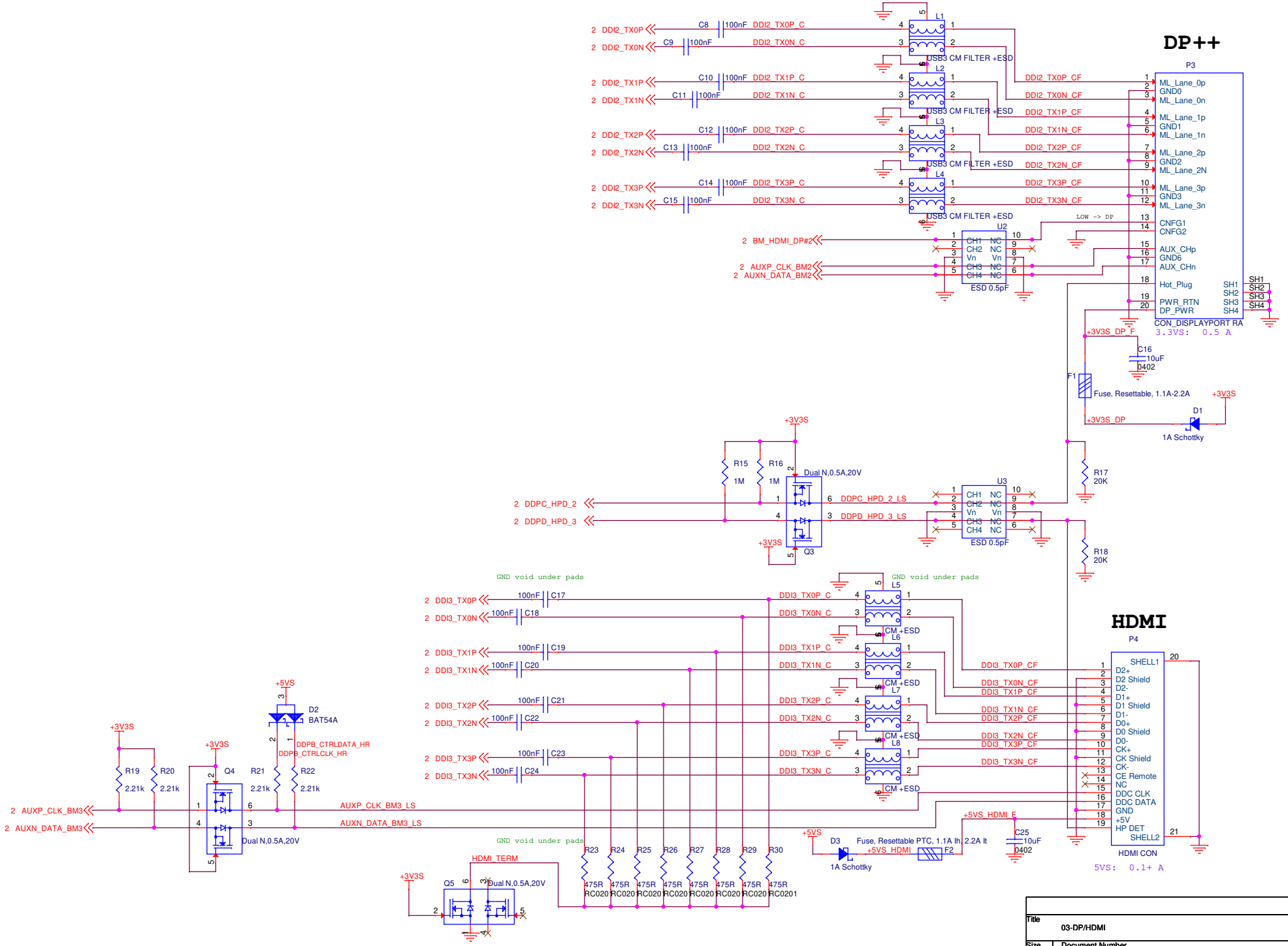

Title	03-DP/HDMI		
Size A3	Document Number <Doc>		Rev 1.0
Date: Tuesday, September 24, 2019	Sheet 3 of 3		